COOLENS®

WWH25-108CTV3*

Megapixel Telecentric Lens

- Compact design with coaxial illumination options;
- Perfect image and supports all kinds of Mega camera;
- High contrast, low distortion, high resolution;
- Optional adjustable Iris for resolution and DOF control;
- Megapixel 'object side' telecentric lens with optional long working distance versions with over 500mm working distance.

Optical Specifications	
Magnification (x)	2.5
Working Distance (mm)	108
Max Sensor Size (Φmm)	11.0(2/3")
Aperture (F/#)	12.5
Telecentricity typical (max) (deg)	0.05
Distortion typical (max) (%)	0.05
MTF30(lp/mm)	55
NA	0.1
Resolution (um)	3.4
Depth of Field (mm)	0.1

Field of View (mm × mm)	
1/2"(6.4x4.8)	2.6×1.9
1/1.8"(7.13x5.37)	2.9×2.1
2/3"(8.45x7.1)	3.4x2.8

Mechanical Specifications	
Mount	C
Length (mm)	114.4
Coaxial Light	Yes
Iris	No

Notes:
1. Depth of Field is calculated value, this value could be used for imaging test, but to get sharp image in application, half of calculated value is suggested.

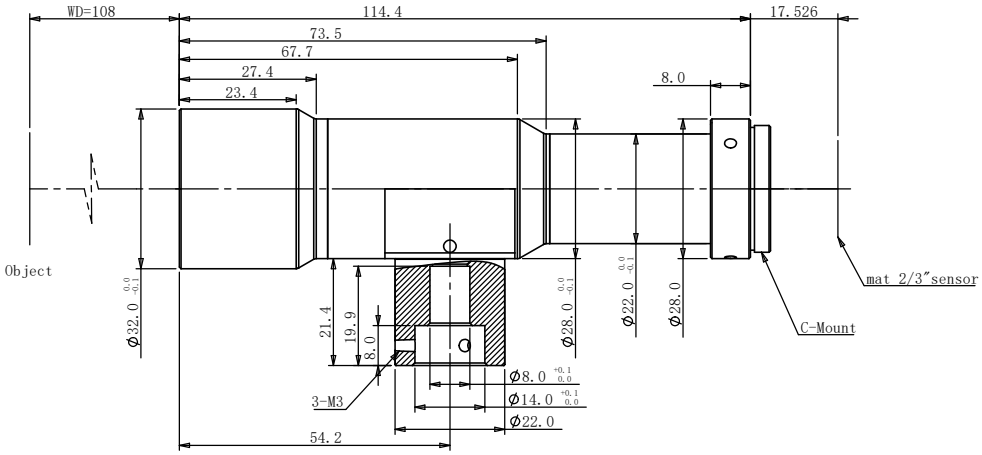

Note: * New product.