COOLENS®

WWH20-108ATV3*

Megapixel Telecentric Lens

- Compact design with coaxial illumination options;
- Perfect image and supports all kinds of Mega camera;
- High contrast, low distortion, high resolution;
- Optional adjustable Iris for resolution and DOF control;
- Megapixel 'object side' telecentric lens with optional long working distance versions with over 500mm working distance.

Optical Specifications	
Magnification (x)	2.0
Working Distance (mm)	108
Max Sensor Size (Φmm)	11(2/3")
Aperture (F/#)	10.5
Telecentricity typical (max) (deg)	0.05
Distortion typical (max) (%)	0.04
NA	0.09558
Resolution (μm)	3.5
Depth of Field (mm)	0.2

Field of View (mm × mm)	
1/2"(6.4x4.8)	3.2x2.4
1/1.8"(7.13x5.37)	3.6x2.7
2/3"(8.45x7.1)	4.2x3.6
Mechanical Specifications	
Mount	C
Length (mm)	129.9
Coaxial Light	No
Iris	No

Notes:
1. Depth of Field is calculated value, this value could be used for imaging test, but to get sharp image in application, half of calculated value is suggested.

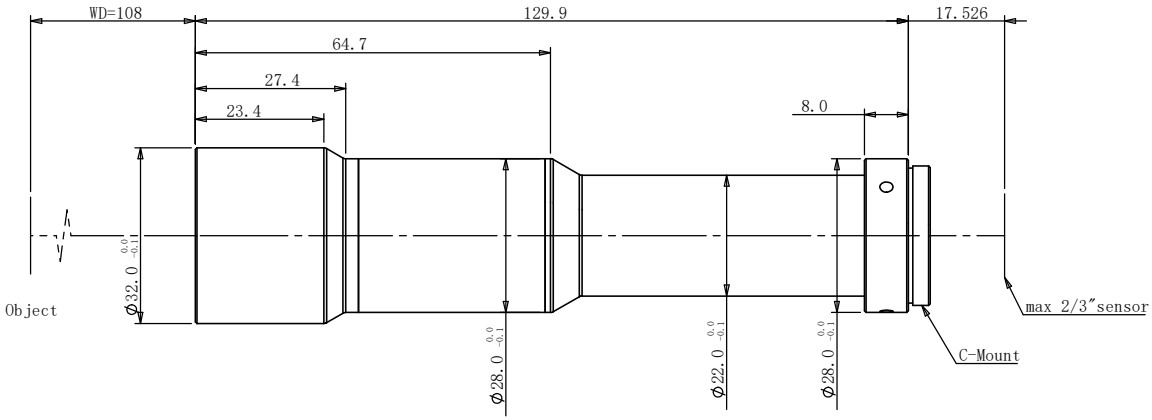

Note: * New product.