WWH098-280AT-230V2

Megapixel Telecentric Lens

- Compact design with coaxial illumination options;
- Perfect image and supports all kinds of Mega camera;
- High contrast, low distortion, high resolution;
- Optional adjustable Iris for resolution and DOF control;
- Megapixel 'object side' telecentric lens with optional long working distance versions with over 500mm working distance.

Optical Specifications	
Magnification (x)	0.98
Working Distance (mm)	280±3
Max Sensor Size (Φmm)	11.0(2/3")
Aperture (F/#)	11
Telecentricity typical (max) (deg)	0.06
Distortion typical (max) (%)	0.03
MTF30(lp/mm)	82
NA	0.04437
Resolution (um)	7.6
Depth of Field (mm)	0.9

Field of View (mm × mm)	
2/3"(8.45x7.1)	8.62x7.24
Mechanical Specifications	
Mount	C
Length (mm)	189.2
Coaxial Light	No
Iris	No
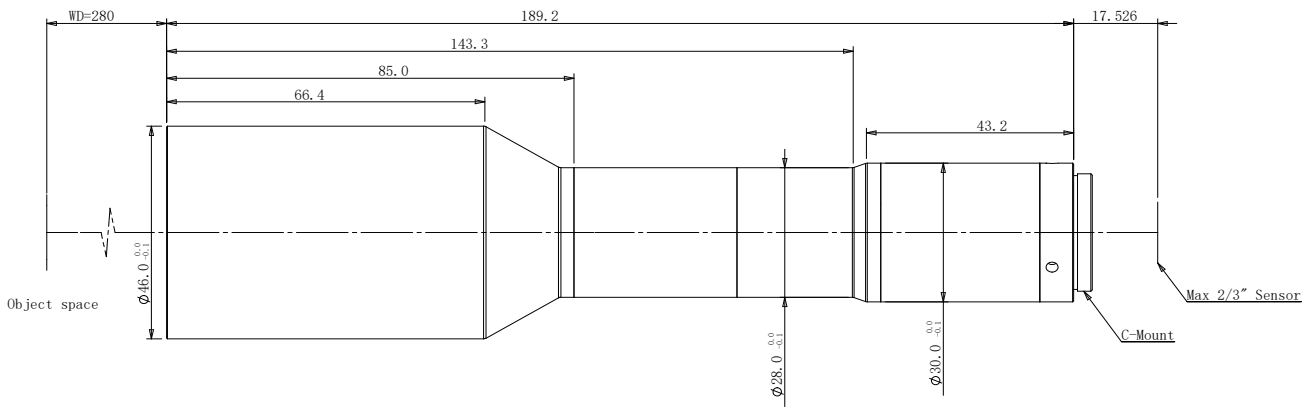
Notes:
1. Depth of Field is calculated value, this value could be used for imaging test, but to get sharp image in application, half of calculated value is suggested.