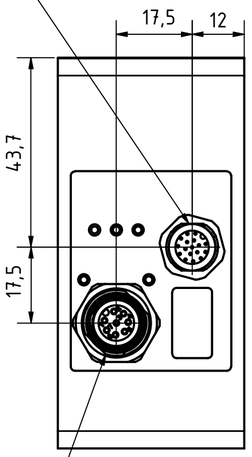

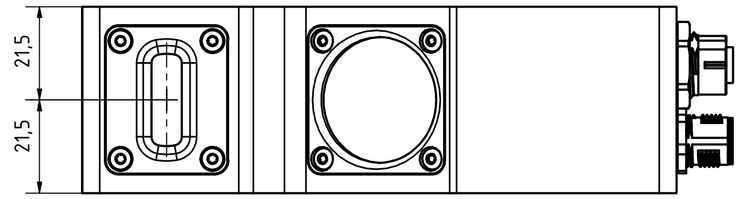

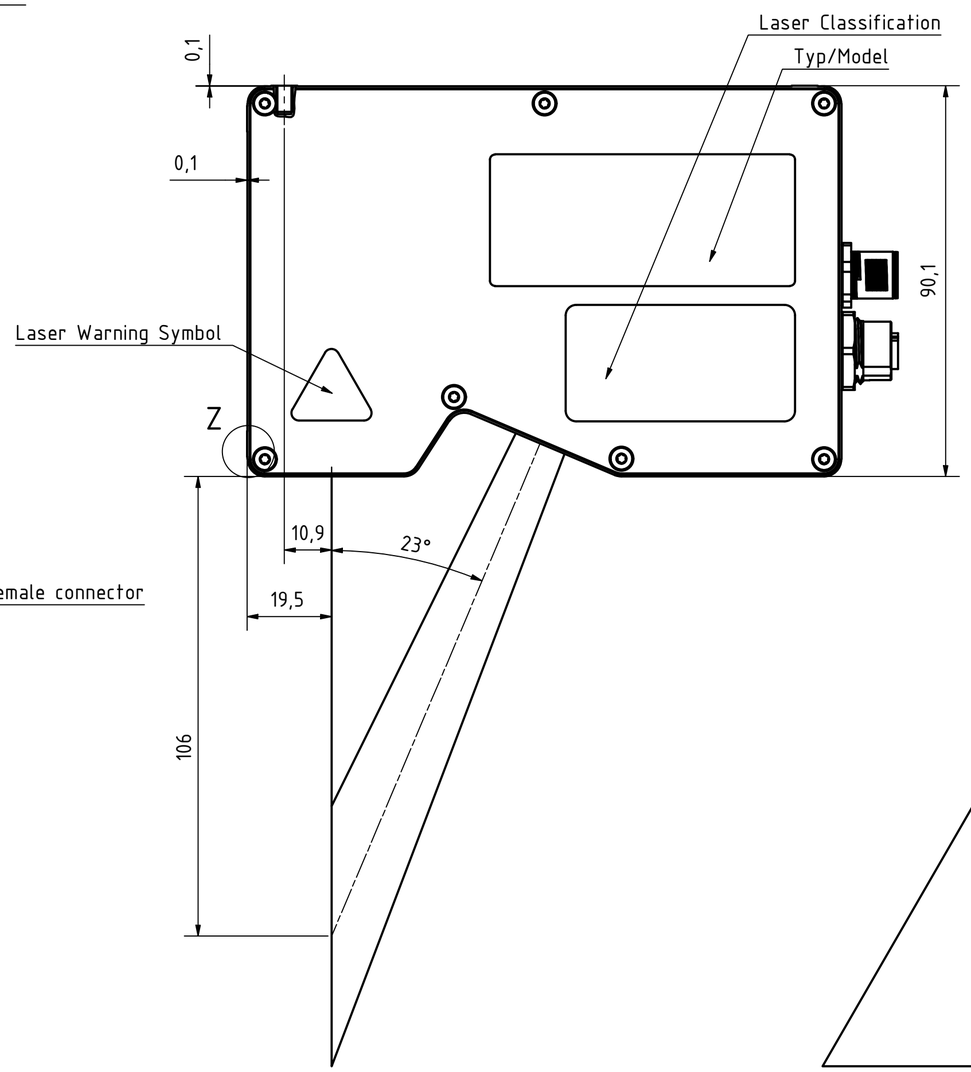

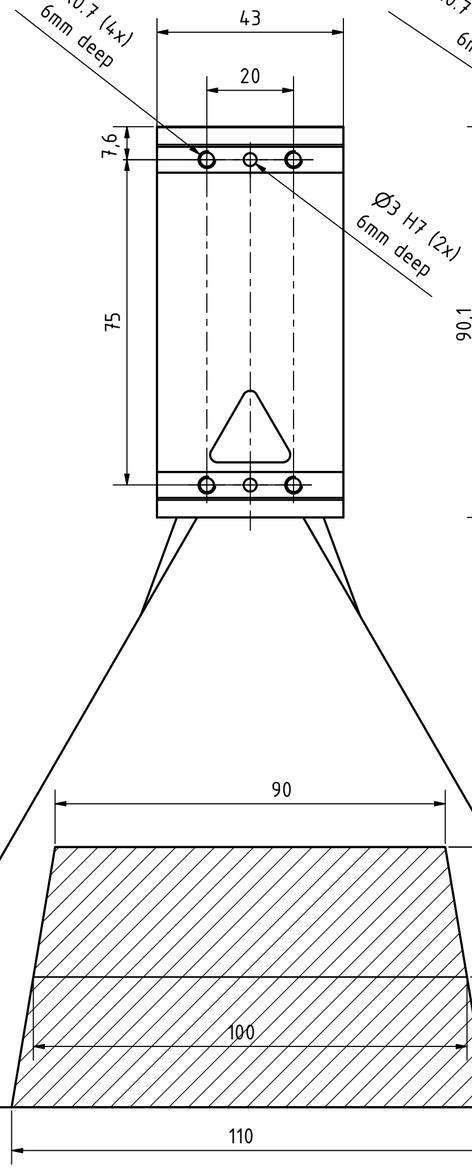

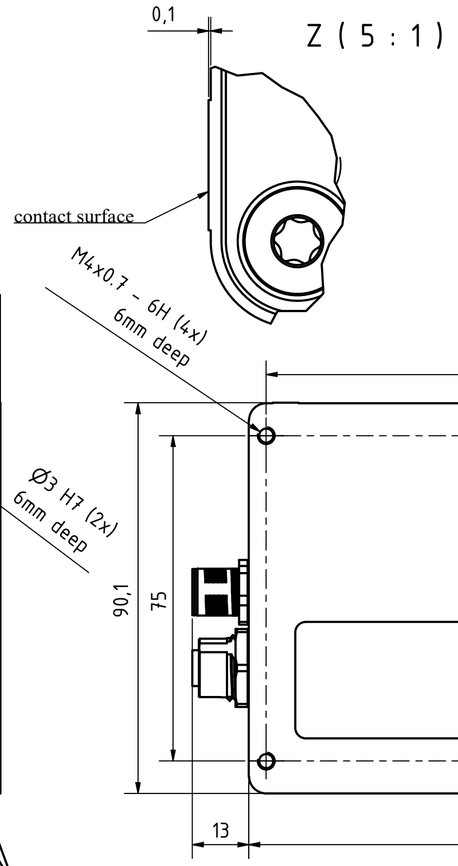

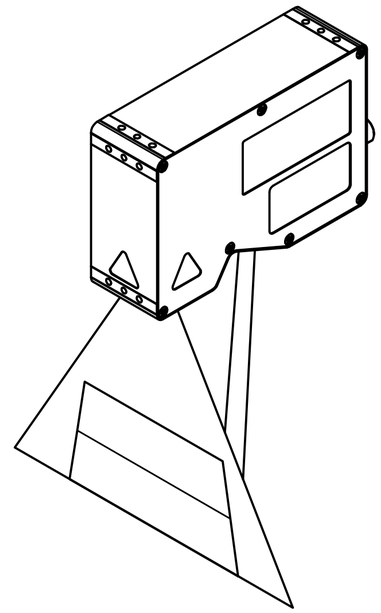

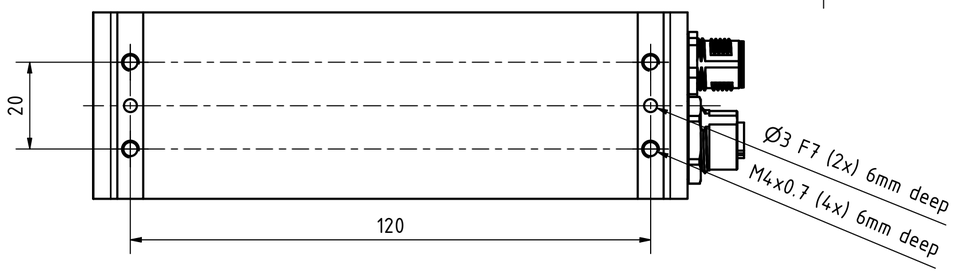

© Automation Technology GmbH 2021
Hermann-Bössow-Str. 6-8, 23843 Bad Oldesloe, Germany
Refer to protection notice ISO 16016

First Angle Projection

	Datum	Name
Gezeichn	14.01.2024	SH
Kontroll		
Norm		

Projekt: C6-ECS

C6-S7-2040-ECS-23-100-106-1G-SX-660-2M_Public

Rev. 1

C6-S7-2040-ECS-23-100-106-1G-SX-660-2M

1 / 1

A2

Scale

Status	Änderungen	Datum	Name