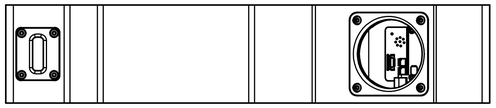

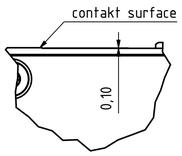

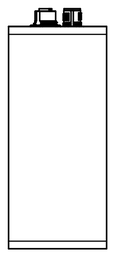

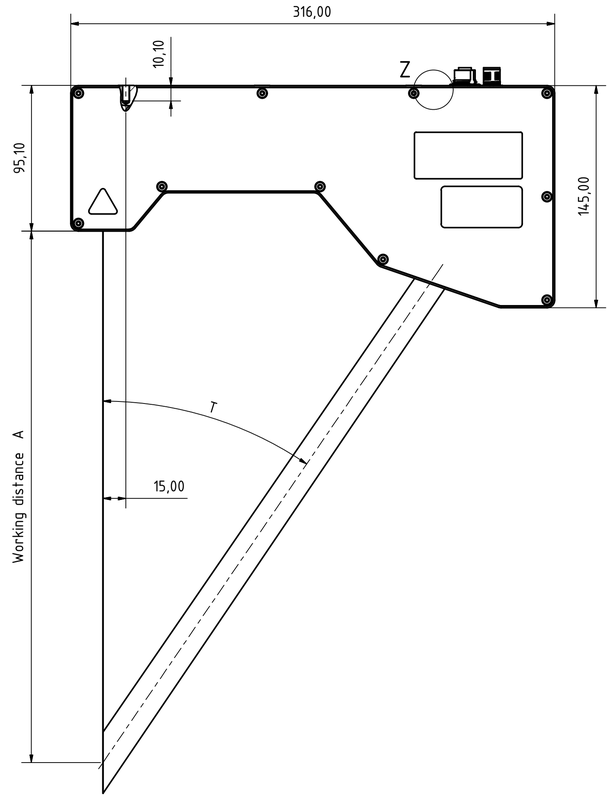

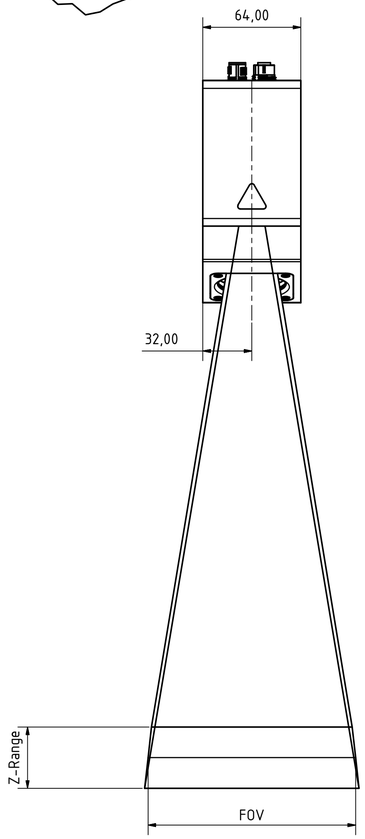

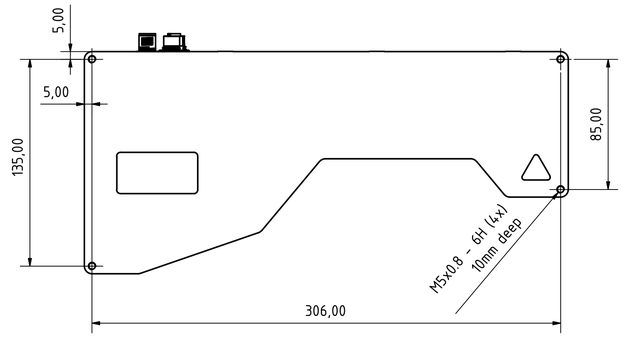

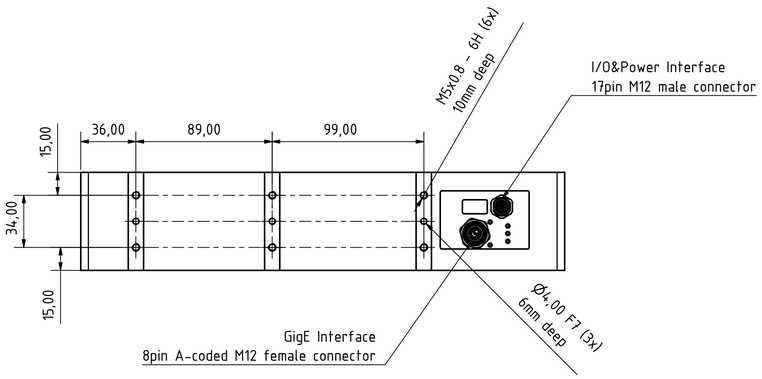

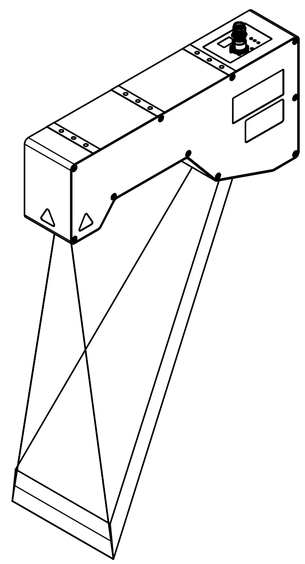

Model	Working distance A	Triangulation angle T	FOV	Z-Range
C5-2040CS30-330	400	30	330	300
C5-1600CS30-260	400	30	260	300
C5-4090CS30-495	400	30	495	300
C5-3360CS30-406	400	30	406	300
C5-4090CS30-288	400	30	288	300
C5-3360CS30-236	400	30	236	300
C5-4090CS30-182	400	30	182	250
C5-3360CS30-150	400	30	150	200
C5-1280CS30-248	400	30	248	300
C5-2040CS19-640	700	19	640	500
C5-1600CS19-500	700	19	500	500
C5-4090CS19-302	700	19	302	500
C5-3360CS19-248	700	19	248	500
C5-2040CS18-1015	744	18	1015	800
C5-1600CS18-795	744	18	795	800
C5-4090CS18-842	744	18	842	800
C5-3360CS18-691	744	18	691	800
C5-4090CS18-490	744	18	490	800
C5-3360CS18-402	744	18	402	800
C5-2040CS15-1200	920	15	1200	1090

© Automation Technology GmbH 2014
Hermann-Bössow-Str. 6-8, 23843 Bad Oldesloe, Germany

Refer to protection notice ISO 16016

Projekt:
C5-CSXX Sensor Series

	Datum	Name
Gezeichnet	26.03.2015	AT
Kontrolliert		
Norm		

C5-XXXXCSXX-XXX_Public

Rev. 1.3

202202030-000_Public

1 / 1

A1

Status | Änderungen | Datum | Name